Tech datasheet

Digital I/O Extender

Reference:
ACCDPIOKIT

SMSEagle



The Digital I/O Extender is an expansion module designed for SMSEagle NXS and MHD devices. It extends the system's digital input and output capabilities by providing 32 additional configurable digital I/O ports.
By eliminating the native I/O limitations of the SMSEagle unit, the extender enables scalable integration with external sensors, actuators, and automation systems. Each port can be individually configured as either a digital input or digital output, allowing flexible adaptation to application requirements.
The module connects to the SMSEagle device via a USB interface, which also supplies power. An optional external power supply can be used for increased flexibility. All configuration, monitoring, and control is performed directly through the SMSEagle web-based GUI.

Key Features

- 32 configurable TTL-compatible (3.3 V) digital input/output ports
- Per-channel configurable as input or output
- USB interface with CDC (Communication Device Class) support
- Powered from the SMSEagle USB port (default) or from an optional external 5 V DC supply (requires jumper change)
- All I/O signals available on screw terminals
- Full configuration and monitoring via SMSEagle web GUI
- Designed for SMSEagle NXS / MHD series devices

Typical Applications

- Industrial automation and monitoring
- Alarm systems and security integration
- Sensor and actuator control
- IoT and remote management systems
- Expanding digital I/O capacity without hardware replacement

Copyright © 2026, PROXIMUS SP. Z O.O.
Specifications and information given in this document are subject to change without prior notice.

General specifications

Parameter	Value
Number of I/O ports	32
Configuration	Individually configurable as input or output
Logic level	TTL compatible
Signal voltage	3.3 V
Connection	Screw terminals
Host interface	USB
Product Dimensions	98 mm × 52 mm × 19 mm
Weight	68g
Operating Temperature	-30°C to +85°C

Electrical specifications

Parameter	Value
Logic level	3.3 V TTL, single-ended, referenced to GND
Input low / high	0 V / 3.3 V (max 3.3 V)
Input type	High-impedance, no internal pull-up or pull-down
Max output current (source/sink)	IO0–IO7, IO16–IO20: 2 mA; IO8–IO15: 25 mA; IO21–IO31: 8 mA
Supply	5 V DC via USB or external terminal

Terminal layout and wiring

Inputs: Ports have no internal pull-up resistors. To read a dry contact, connect an external pull-up resistor (e.g. 10 kΩ) between the input and 3.3 V, and wire the contact between the input and GND. Do not apply voltages above 3.3 V.

Outputs: Use a series resistor when connecting to external circuits. Outputs cannot drive relays directly; use a transistor or relay interface module.

Isolation: The extender is not galvanically isolated. For 12/24 V industrial signals or equipment with a different ground potential, use optocouplers or interface relays.

Testing inputs: Do not test an input by wiring it to an output of the same extender. The input level follows the output, but the extender does not report changes caused by its own outputs, so no input rule is triggered and no message is sent. To test an input, use an external signal: open and close a contact wired as shown in the dry contact diagram, or drive the input from an output of a second extender through a 1 kΩ series resistor, with the GND terminals of both extenders connected. Do not leave a configured input unconnected. A floating input picks up interference and can generate hundreds of events per second, which delays real events and can trigger many messages.

Copyright © 2026, PROXIMUS SP. Z O.O.
Specifications and information given in this document are subject to change without prior notice.

Terminal layout

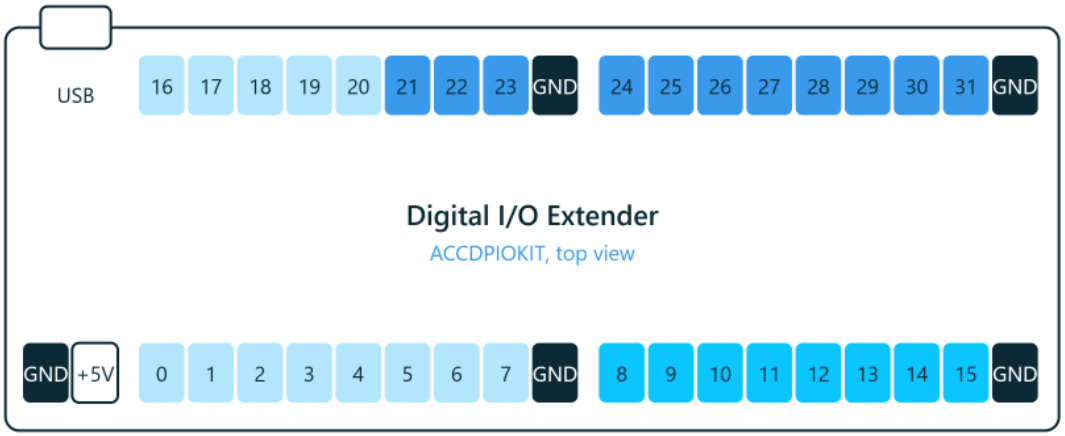

Terminal order as printed on the enclosure; front edge at the bottom

Relay module output wiring

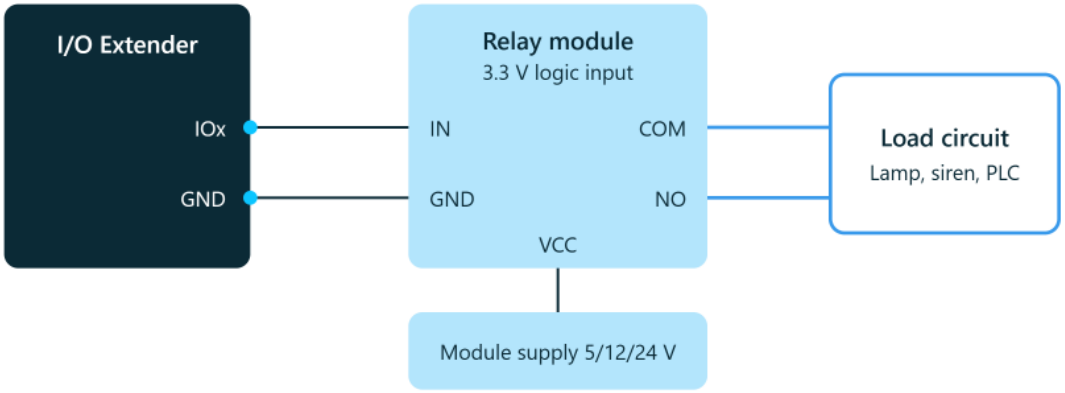

Use IO8–IO15 (25 mA) if the module input needs more than 2 mA

Dry contact input wiring

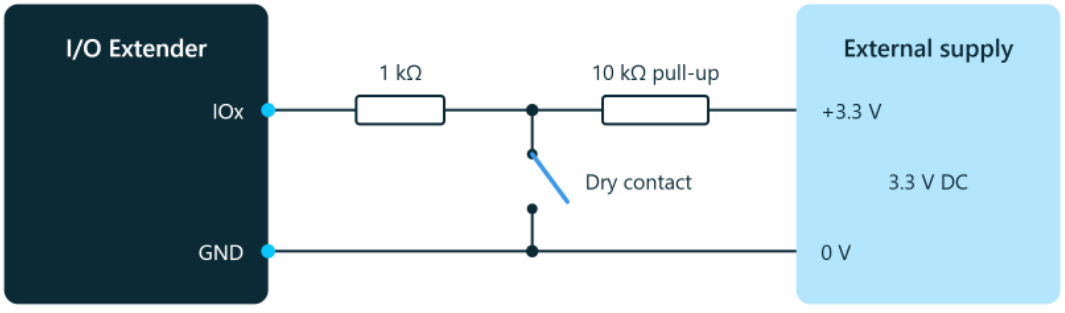

Contact open: input reads 1 (3.3 V). Contact closed: input reads 0 (0 V).

Copyright © 2026, PROXIMUS SP. Z O.O.
Specifications and information given in this document are subject to change without prior notice.

Mechanical and mounting

Enclosure dimensions: 98 × 52 × 19 mm. The enclosure has no mounting holes or DIN rail clip.

For installation on a 35 mm DIN rail (TS35), we recommend placing the extender inside a Kradex Z101 ABS V0 modular DIN rail enclosure. The extender fits inside the Z101 lying flat. Route the I/O wiring and the USB cable through openings in the enclosure walls.

Useful external links

Product accessories: *https://www.smseagle.eu/products/accessories/*

Copyright © 2026, PROXIMUS SP. Z O.O.
Specifications and information given in this document are subject to change without prior notice.